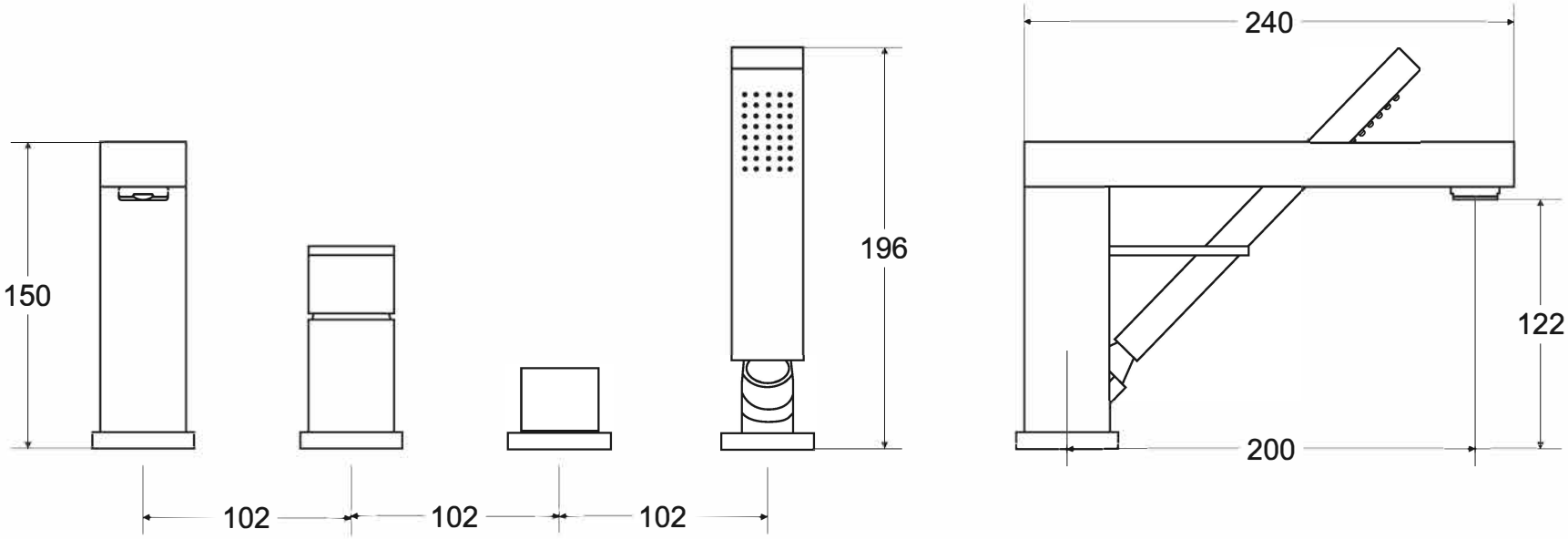Modern / Varium